STL35N15F3

N-channel 150 V, 0.0355 Ω, 7 A STripFET™ III Power MOSFET in PowerFLAT™ 5x6 package

Datasheet — production data

Features

Order code	V_{DSS}	$R_{DS(on)}$ max	I_D
STL35N15F3	150 V	< 0.04 Ω	7 A (1)

1. The value is rated according $R_{thj-pcb}$

- Improved die-to-footprint ratio
- Very low profile package (1mm max)
- Very low thermal resistance
- Low on-resistance

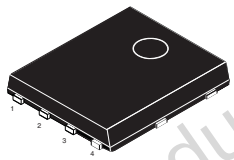

PowerFLAT™ 5x6

Application

- Switching application

Description

This device is an N-channel enhancement mode Power MOSFET produced using STMicroelectronics' STripFET™ III technology, which is specifically designed to minimize on-resistance and gate charge to provide superior switching performance.

Figure 1. Internal schematic diagram

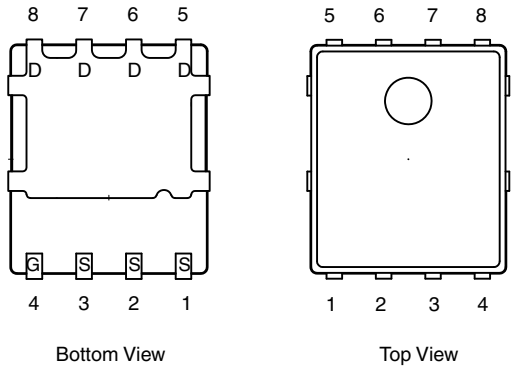

Table 1. Device summary

Order code	Marking	Package	Packaging
STL35N15F3	L35N15F3	PowerFLAT™ 5x6	Tape and reel

Obsolete Product(s) - Obsolete Product(s)

This is information on a product in full production. www.st.com

Contents

1 Electrical ratings 3

2 Electrical characteristics 4

2.1 Electrical characteristics 6

3 Test circuits 8

4 Package mechanical data 9

5 Packaging mechanical data 14

6 Revision history 16

Obsolete Product(s) - Obsolete Product(s)

1 Electrical ratings

Table 2. Absolute maximum ratings

Symbol	Parameter	Value	Unit
V_{DS}	Drain-source voltage	150	V
V_{GS}	Gate-source voltage	± 20	V
I_D (1)	Drain current (continuous) at T_C = 25 °C	33	A
I_D (2)	Drain current (continuous) at T_{pcb} = 25 °C	7	A
I_D (2)	Drain current (continuous) at T_{pcb} = 100 °C	4.3	A
I_{DM} (3),(2)	Drain current (pulsed)	28	A
P_{TOT} (1)	Total dissipation at T_C = 25 °C	80	W
P_{TOT} (2)	Total dissipation at T_{pcb} = 25 °C	4	W
T_J T_{stg}	Operating junction temperature Storage temperature	-55 to 150	°C

1. The value is rated according to R_{thj-c}
2. The value is rated according to $R_{thj-pcb}$
3. Pulse width limited by safe operating area

Table 3. Thermal resistance

Symbol	Parameter	Value	Unit
$R_{thj-case}$	Thermal resistance junction-case	1.56	°C/W
$R_{thj-pcb}$ (1)	Thermal resistance junction-pcb	31.3	°C/W

1. When mounted on FR-4 board of 1inch², 2oz Cu, t < 10 sec

Obsolete Product(s) - Obsolete Product(s)

2 Electrical characteristics

(T_{CASE} = 25 °C unless otherwise specified)

Table 4. On/off states

Symbol	Parameter	Test conditions	Min.	Typ.	Max.	Unit
$V_{(BR)DSS}$	Drain-source breakdown voltage	I_D = 1 mA, V_{GS}= 0	150			V
I_{DSS}	Zero gate voltage drain current (V_{GS} = 0)	V_{DS} = 150 V V_{DS} = 150 V, T_C = 125 °C			1 10	µA µA
I_{GSS}	Gate body leakage current (V_{DS} = 0)	V_{GS} = ±20 V			±100	nA
$V_{GS(th)}$	Gate threshold voltage	V_{DS}= V_{GS}, I_D = 250 µA	2		4	V
$R_{DS(on)}$	Static drain-source on-resistance	V_{GS}= 10 V, I_D= 3.5 A		0.0355	0.04	Ω

Table 5. Dynamic

Symbol	Parameter	Test conditions	Min.	Typ.	Max.	Unit
C_{iss} C_{oss} C_{rss}	Input capacitance Output capacitance Reverse transfer capacitance	V_{DS} =25 V, f=1 MHz, V_{GS}=0	-	1905 171 28	-	pF pF pF
Q_g Q_{gs} Q_{gd}	Total gate charge Gate-source charge Gate-drain charge	V_{DD}=15 V, I_D = 6 A V_{GS} =10 V *Figure 14*	-	49.4 7.3 22.6	-	nC nC nC
R_G	Gate input resistance	f=1 MHz Gate DC Bias = 0 Test signal level = 20 mV open drain	-	1.7	-	Ω

Table 6. Switching times

Symbol	Parameter	Test conditions	Min.	Typ.	Max.	Unit
$t_{d(on)}$ t_r $t_{d(off)}$ t_f	Turn-on delay time Rise time Turn-off delay time Fall time	V_{DD}=75 V, I_D= 3.5 A, R_G= 4.7 Ω, V_{GS}=10 V *Figure 13*	-	14 11 57 20	-	ns ns ns ns

Obsolete Product(s) - Obsolete Product(s)

Table 7. Source drain diode

Symbol	Parameter	Test conditions	Min.	Typ.	Max.	Unit
I_{SD}	Source-drain current		-		7	A
I_{SDM}(1)	Source-drain current (pulsed)		-		28	A
V_{SD}(2)	Forward on voltage	I_{SD}= 6 A, V_{GS}=0	-		1.3	V
t_{rr} Q_{rr} I_{RRM}	Reverse recovery time Reverse recovery charge Reverse recovery current	I_{SD}= 6 A, di/dt = 100 A/µs, V_{DD}=120 V, Tj=150 °C	-	124 670 11		ns nC A

1. Pulse width limited by safe operating area
2. Pulsed: pulse duration=300µs, duty cycle 1.5%

Obsolete Product(s) - Obsolete Product(s)

2.1 Electrical characteristics

Figure 2. Safe operating area

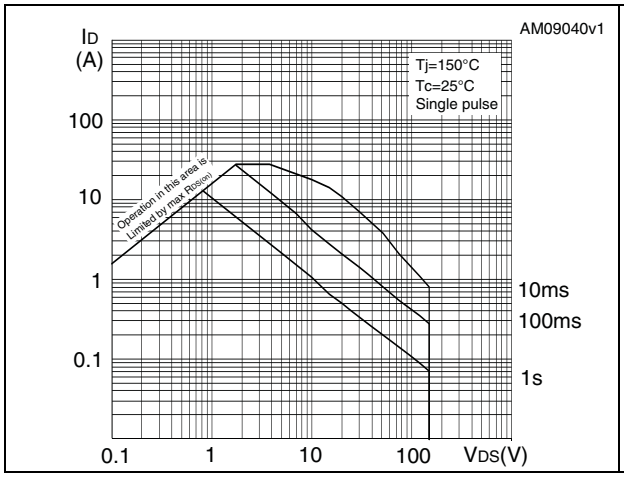

Figure 3. Thermal impedance

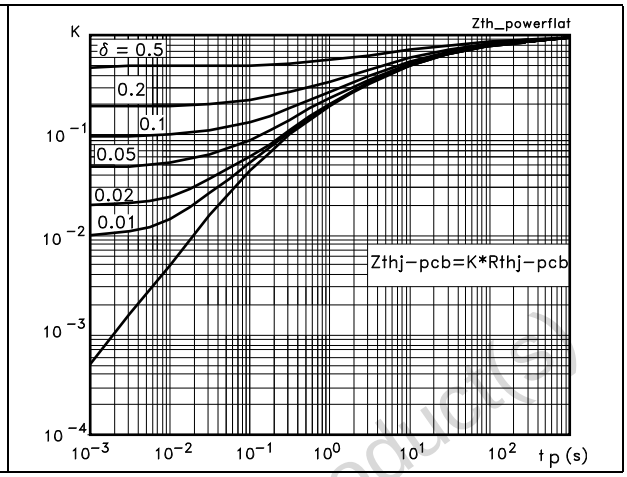

Figure 4. Output characteristics

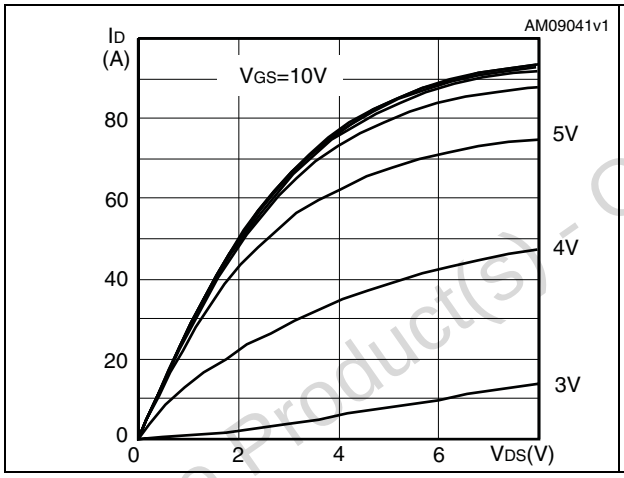

Figure 5. Transfer characteristics

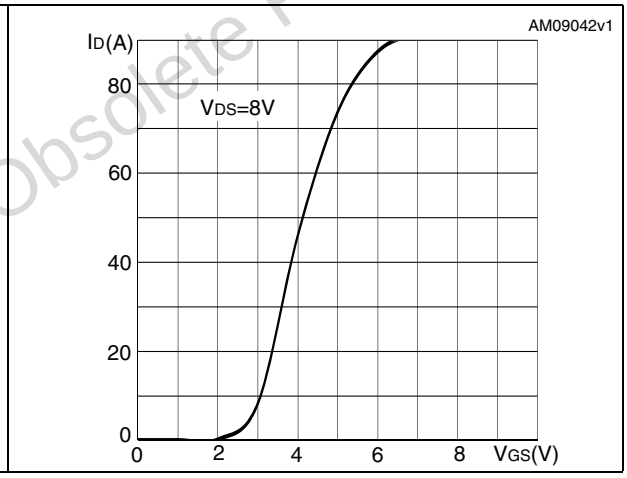

Figure 6. Normalized B_{VDSS} vs temperature

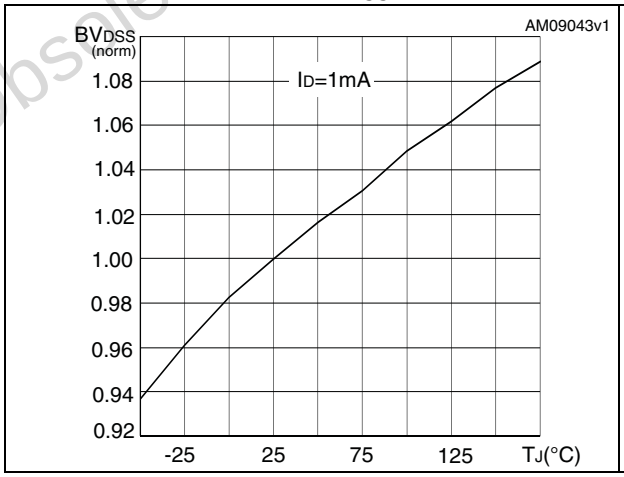

Figure 7. Static drain-source on-resistance

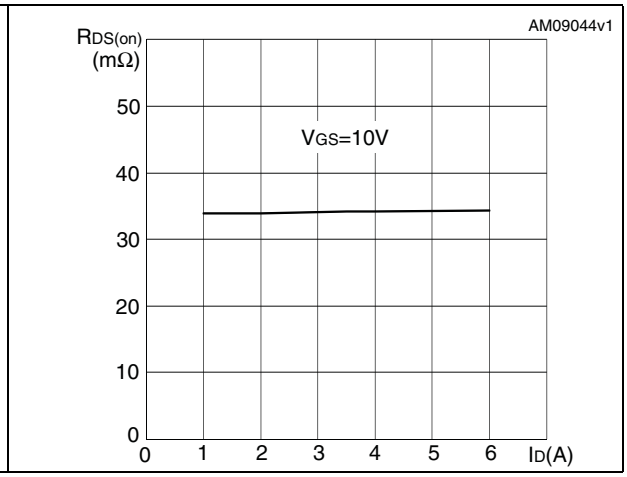

Obsolete Product(s) - Obsolete Product(s)

Figure 8. Gate charge vs gate-source voltage

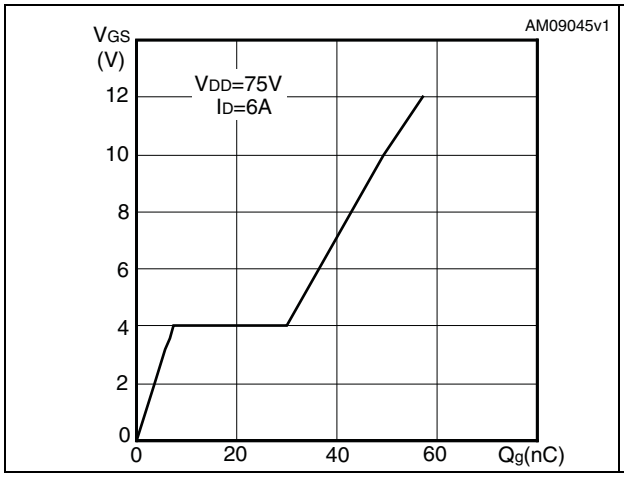

Figure 9. Capacitance variations

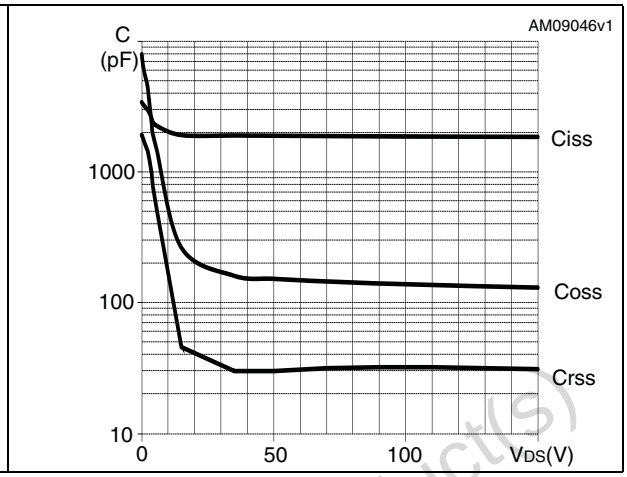

Figure 10. Normalized gate threshold voltage vs temperature

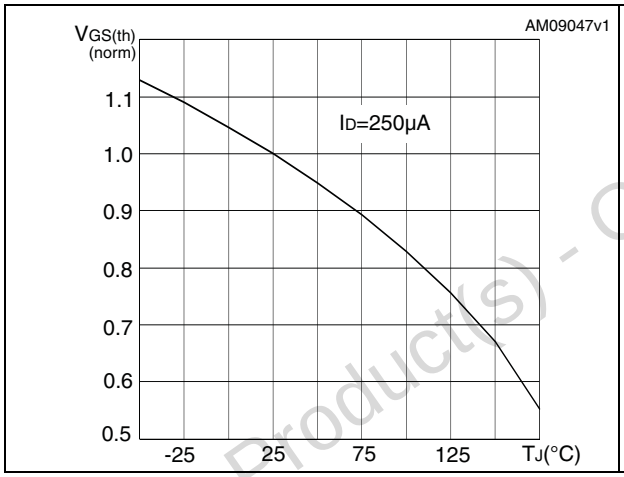

Figure 11. Normalized on-resistance vs temperature

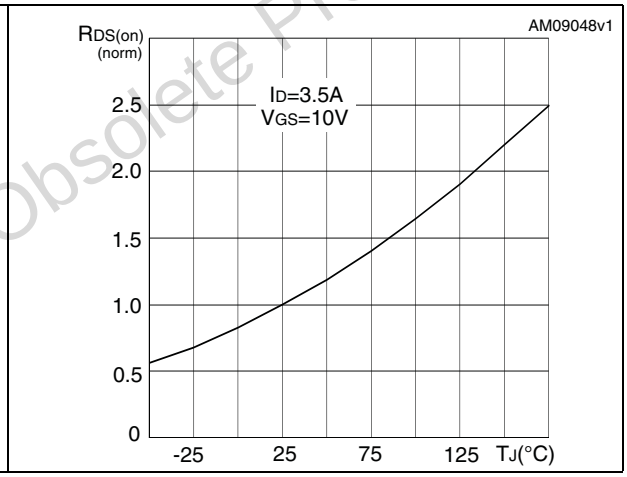

Figure 12. Source-drain diode forward characteristics

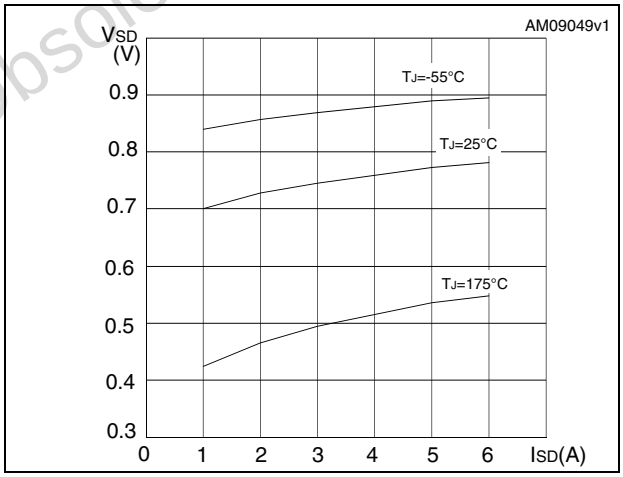

Obsolete Product(s) - Obsolete Product(s)

3 Test circuits

Figure 13. Switching times test circuit for resistive load

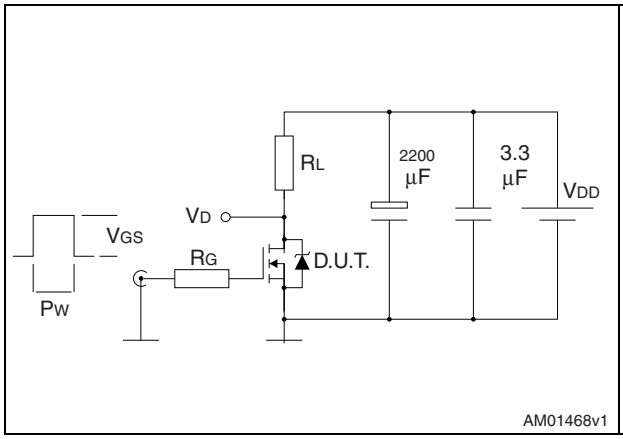

Figure 14. Gate charge test circuit

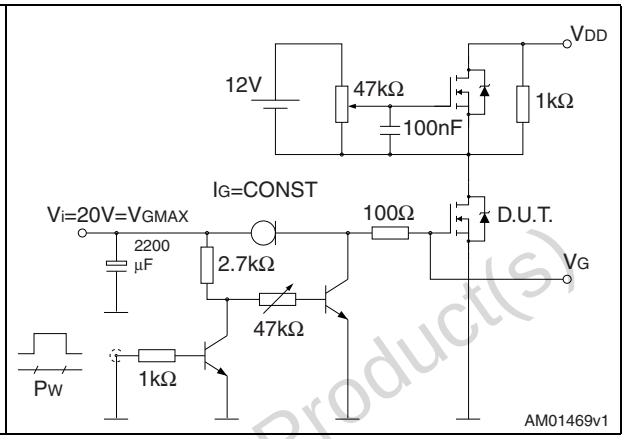

Figure 15. Test circuit for inductive load switching and diode recovery times

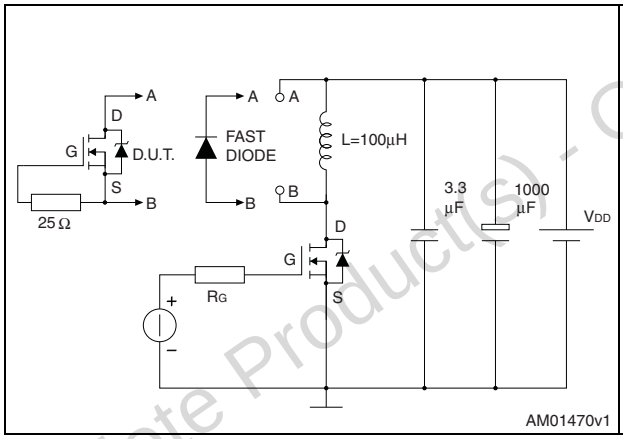

Figure 16. Unclamped inductive load test circuit

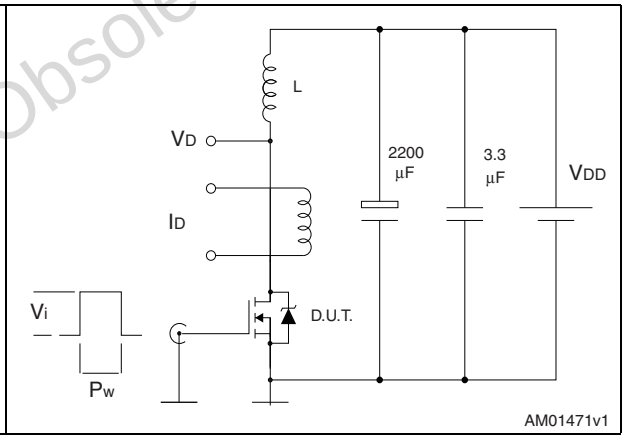

Figure 17. Unclamped inductive waveform

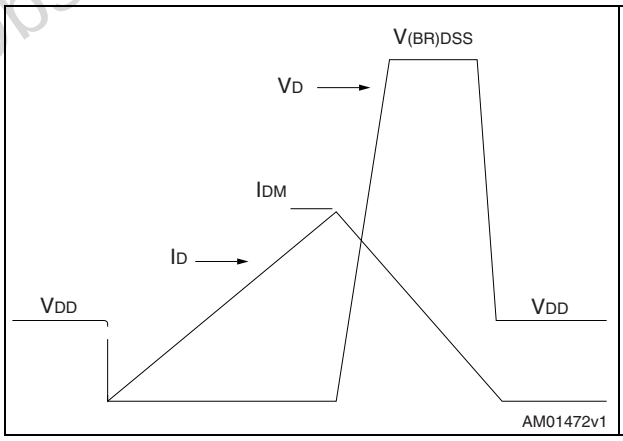

Figure 18. Switching time waveform

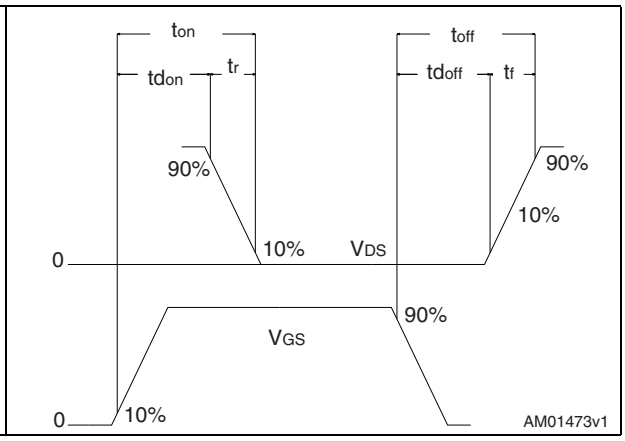

Obsolete Product(s) - Obsolete Product(s)

4 Package mechanical data

In order to meet environmental requirements, ST offers these devices in different grades of ECOPACK® packages, depending on their level of environmental compliance. ECOPACK® specifications, grade definitions and product status are available at: www.st.com. ECOPACK is an ST trademark.

Table 8. PowerFLAT™ 5x6 type C-B mechanical data

Dim.	mm		
	Min.	Typ.	Max.
A	0.80	0.83	0.93
A1	0	0.02	0.05
A3		0.20	
b	0.35	0.40	0.47
D		5.00	
D1		4.75	
D2	4.15	4.20	4.25
E		6.00	
E1		5.75	
E2	3.43	3.48	3.53
E4	2.58	2.63	2.68
e		1.27	
L	0.70	0.80	0.90

Obsolete Product(s) - Obsolete Product(s)

Figure 19. PowerFLAT™ 5x6 type C-B drawing

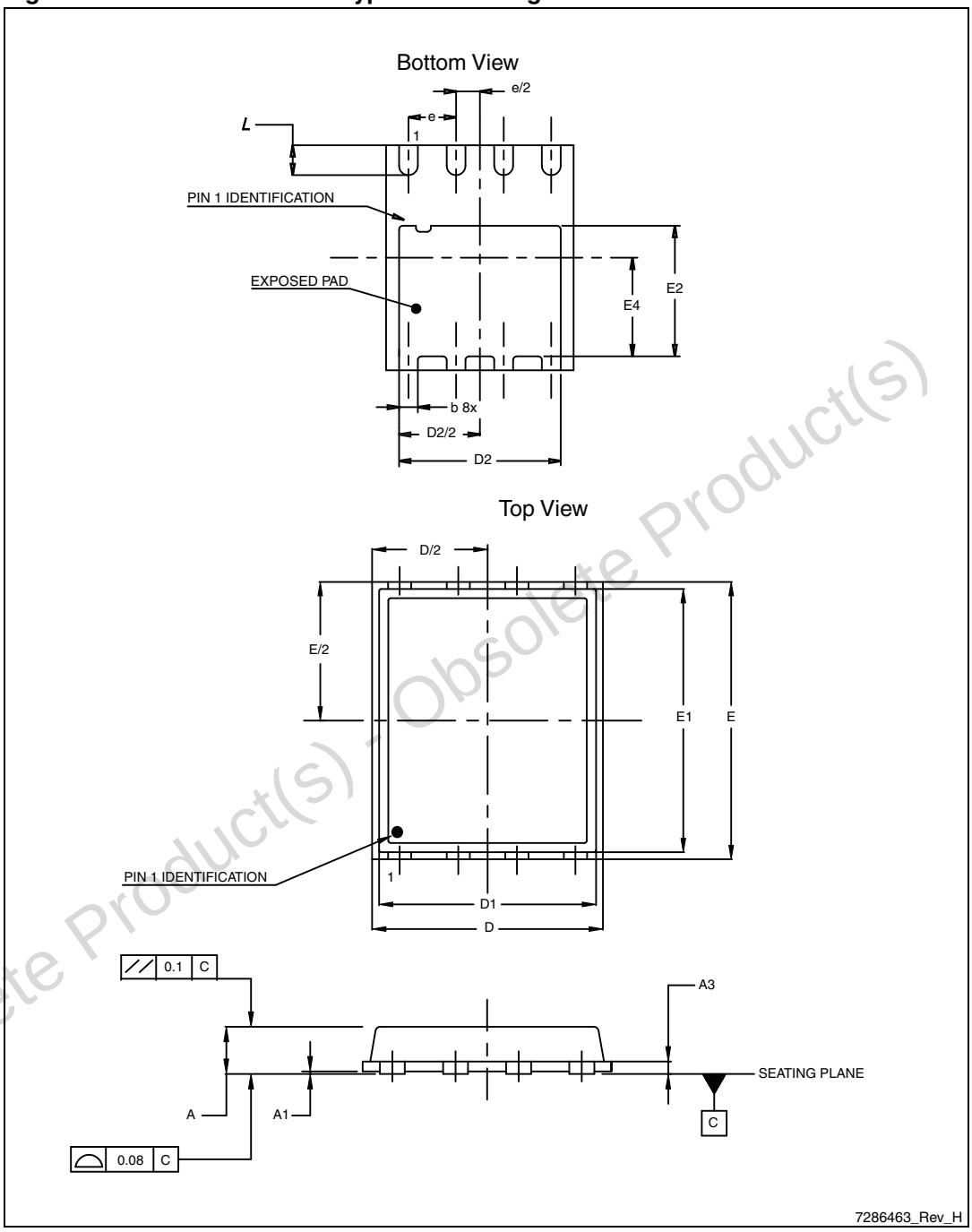

Obsolete Product(s) - Obsolete Product(s)

Table 9. PowerFLAT™ 5x6 type S-C mechanical data

Dim.	mm		
	Min.	Typ.	Max.
A	0.80		1.00
A1	0.02		0.05
A2		0.25	
b	0.30		0.50
D		5.20	
E		6.15	
D2	4.11		4.31
E2	3.50		3.70
e		1.27	
e1		0.65	
L	0.715		1.015
K	1.05		1.35

Obsolete Product(s) - Obsolete Product(s)

Figure 20. PowerFLAT™ 5x6 type S-C mechanical data

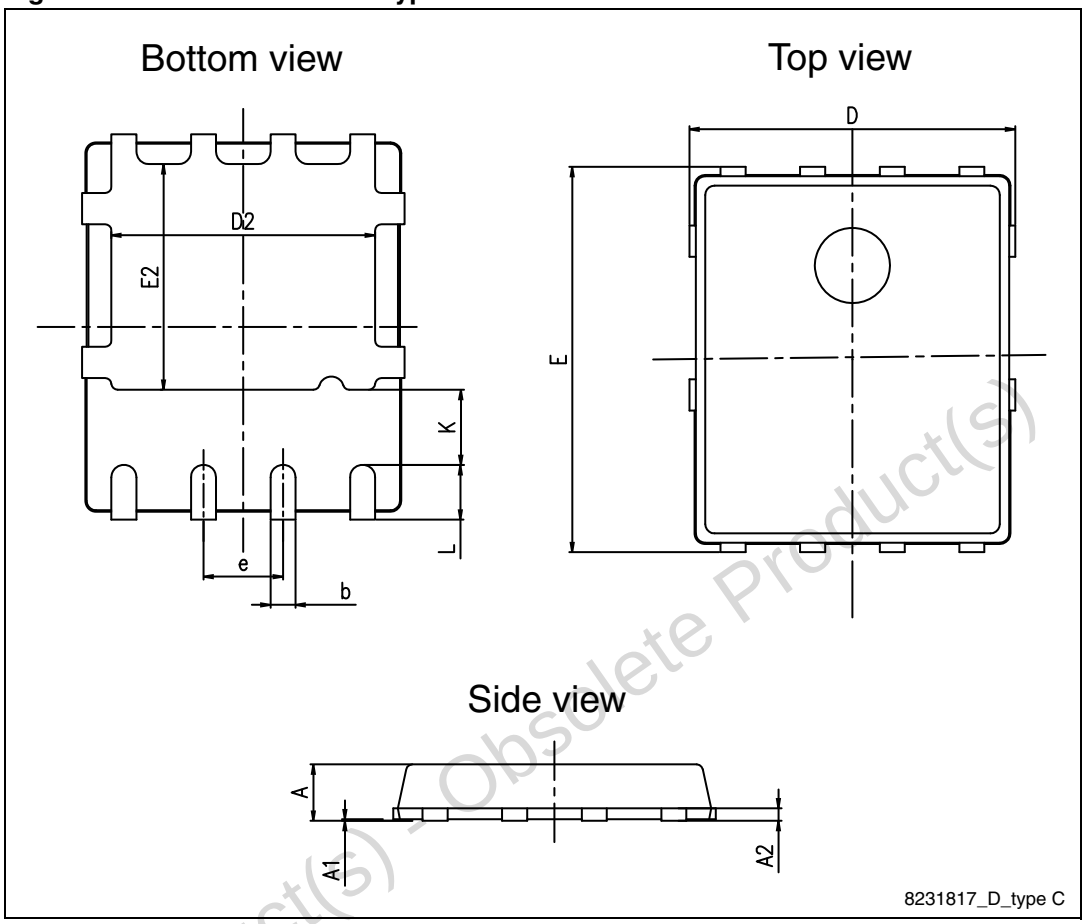

Obsolete Product(s) - Obsolete Product(s)

Figure 21. PowerFLAT™ 5x6 recommended footprint (dimensions in mm)

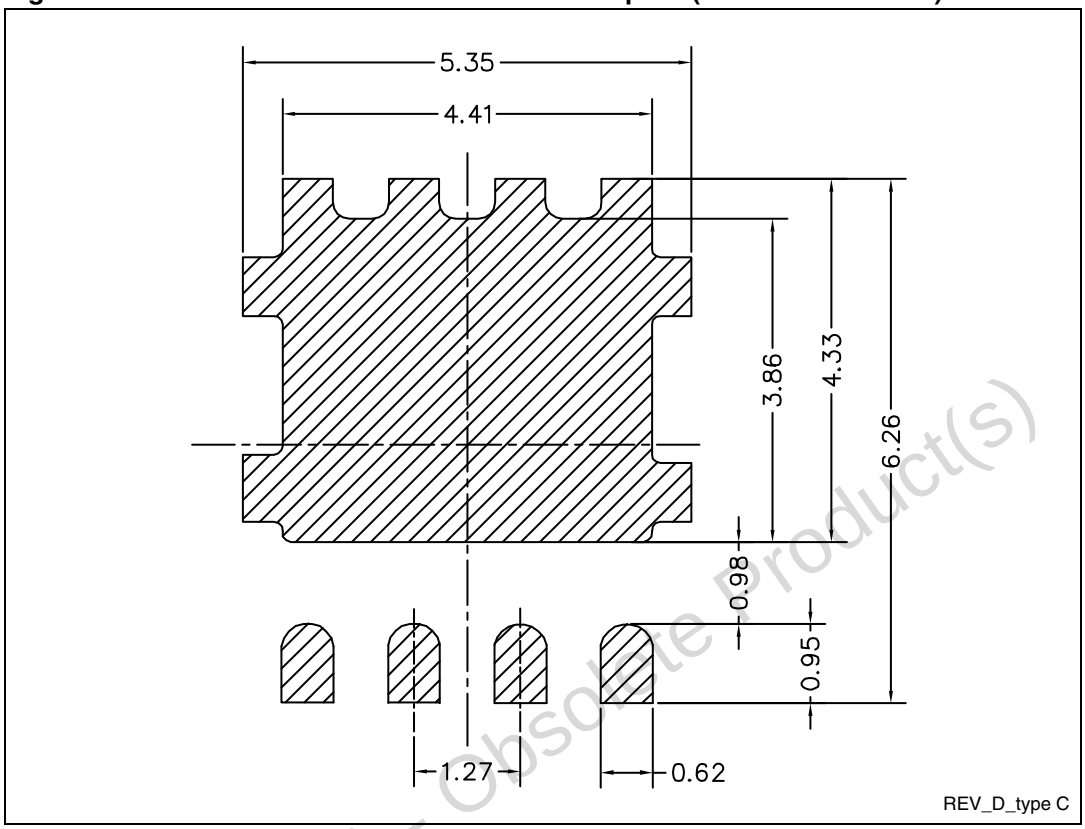

Obsolete Product(s) - Obsolete Product(s)

5 Packaging mechanical data

Figure 22. PowerFLAT™ 5x6 tape

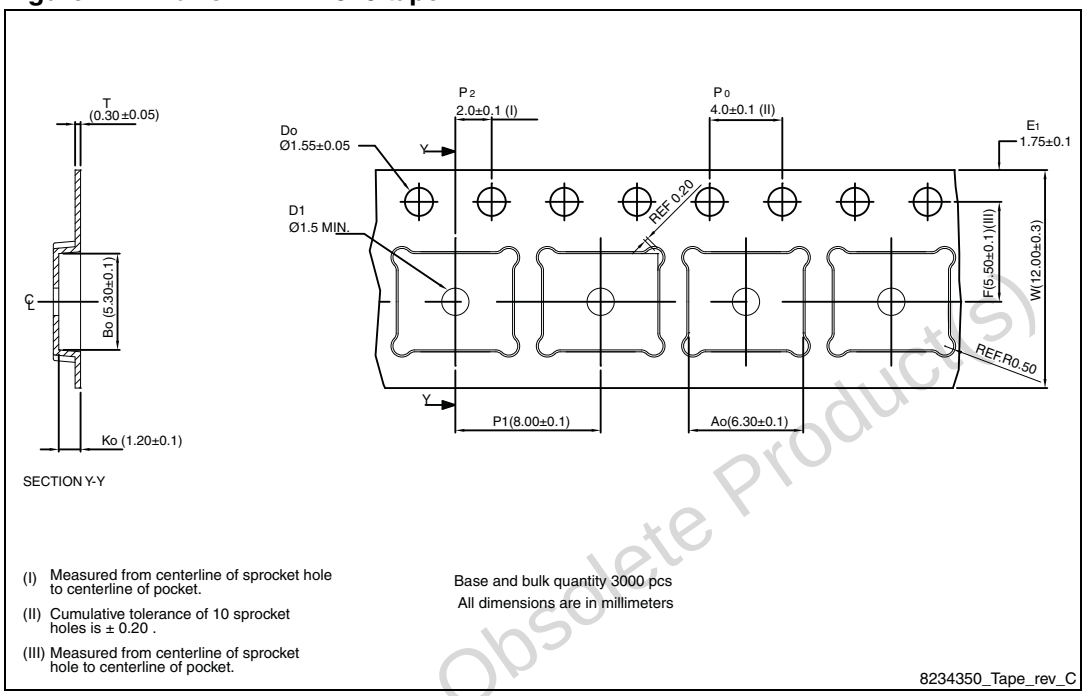

Figure 23. PowerFLAT™ 5x6 package orientation in carrier tape.

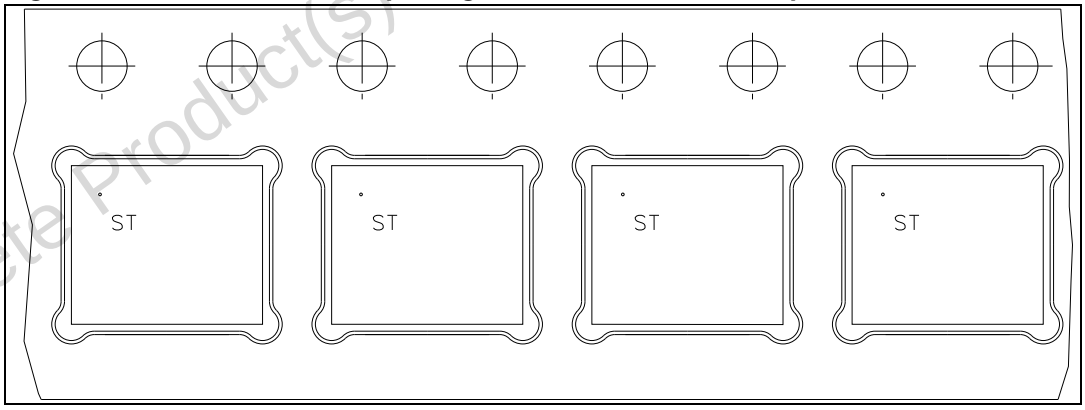

Obsolete Product(s) - Obsolete Product(s)

Figure 24. PowerFLAT™ 5x6 reel

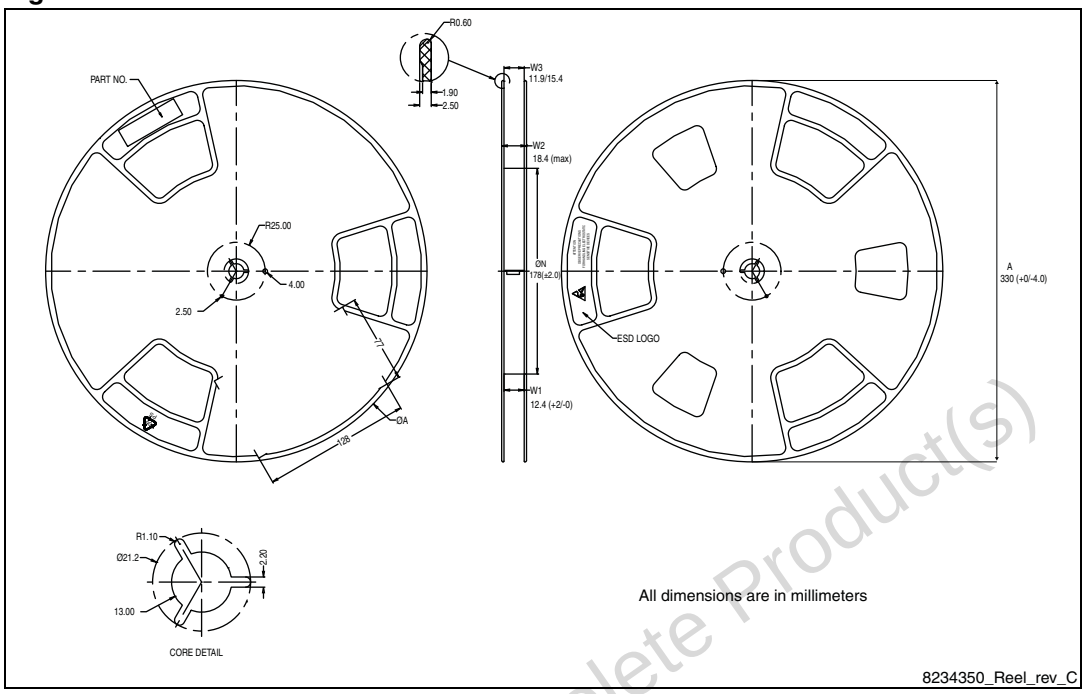

Obsolete Product(s) - Obsolete Product(s)

6 Revision history

Table 10. Document revision history

Date	Revision	Changes
16-Mar-2011	1	Initial release.
10-May-2012	2	*Section 4: Package mechanical data* has been added. Minor text changes.

Obsolete Product(s) - Obsolete Product(s)

Please Read Carefully:

Information in this document is provided solely in connection with ST products. STMicroelectronics NV and its subsidiaries (“ST”) reserve the right to make changes, corrections, modifications or improvements, to this document, and the products and services described herein at any time, without notice.

All ST products are sold pursuant to ST’s terms and conditions of sale.

Purchasers are solely responsible for the choice, selection and use of the ST products and services described herein, and ST assumes no liability whatsoever relating to the choice, selection or use of the ST products and services described herein.

No license, express or implied, by estoppel or otherwise, to any intellectual property rights is granted under this document. If any part of this document refers to any third party products or services it shall not be deemed a license grant by ST for the use of such third party products or services, or any intellectual property contained therein or considered as a warranty covering the use in any manner whatsoever of such third party products or services or any intellectual property contained therein.

UNLESS OTHERWISE SET FORTH IN ST’S TERMS AND CONDITIONS OF SALE ST DISCLAIMS ANY EXPRESS OR IMPLIED WARRANTY WITH RESPECT TO THE USE AND/OR SALE OF ST PRODUCTS INCLUDING WITHOUT LIMITATION IMPLIED WARRANTIES OF MERCHANTABILITY, FITNESS FOR A PARTICULAR PURPOSE (AND THEIR EQUIVALENTS UNDER THE LAWS OF ANY JURISDICTION), OR INFRINGEMENT OF ANY PATENT, COPYRIGHT OR OTHER INTELLECTUAL PROPERTY RIGHT.

UNLESS EXPRESSLY APPROVED IN WRITING BY TWO AUTHORIZED ST REPRESENTATIVES, ST PRODUCTS ARE NOT RECOMMENDED, AUTHORIZED OR WARRANTED FOR USE IN MILITARY, AIR CRAFT, SPACE, LIFE SAVING, OR LIFE SUSTAINING APPLICATIONS, NOR IN PRODUCTS OR SYSTEMS WHERE FAILURE OR MALFUNCTION MAY RESULT IN PERSONAL INJURY, DEATH, OR SEVERE PROPERTY OR ENVIRONMENTAL DAMAGE. ST PRODUCTS WHICH ARE NOT SPECIFIED AS "AUTOMOTIVE GRADE" MAY ONLY BE USED IN AUTOMOTIVE APPLICATIONS AT USER’S OWN RISK.

Resale of ST products with provisions different from the statements and/or technical features set forth in this document shall immediately void any warranty granted by ST for the ST product or service described herein and shall not create or extend in any manner whatsoever, any liability of ST.

ST and the ST logo are trademarks or registered trademarks of ST in various countries.

Information in this document supersedes and replaces all information previously supplied.

The ST logo is a registered trademark of STMicroelectronics. All other names are the property of their respective owners.

© 2012 STMicroelectronics - All rights reserved

STMicroelectronics group of companies

Australia - Belgium - Brazil - Canada - China - Czech Republic - Finland - France - Germany - Hong Kong - India - Israel - Italy - Japan - Malaysia - Malta - Morocco - Philippines - Singapore - Spain - Sweden - Switzerland - United Kingdom - United States of America

www.st.com

Obsolete Product(s) - Obsolete Product(s)